3-PC FLANGE BALL VALVE

三片式德标法兰球阀

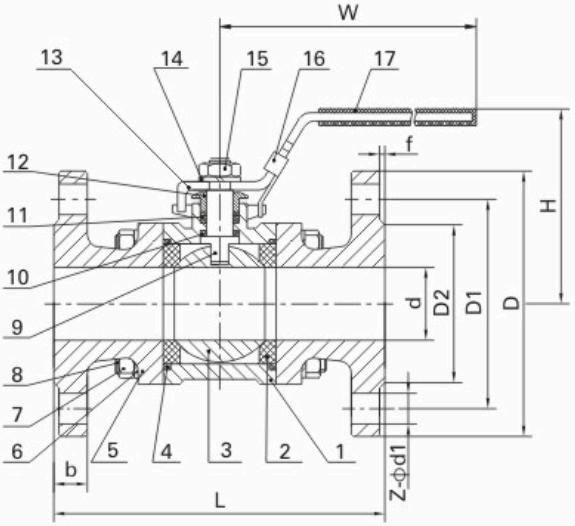

MV-34

- 法兰标准：DIN EN1092–1 DIN 2545
- 结构长度：EN558 Series28 DIN3202–F1
- 公称压力：PN40
- 工作温度：–25℃～+ 180℃
- 材　　料：CF8M, CF8, CF3M, WCB

- Investment casting for body and cap
- Flanged ends: DIN EN1092-1 DIN 2545
- Face to face: EN558 Series28 DIN3202-F1
- Pressure rating: PN40
- Working temperature: –25℃～+ 180℃
- Material: CF8M, CF8, CF3M, WCB

PRESSURE-TEMPERATURE RATING

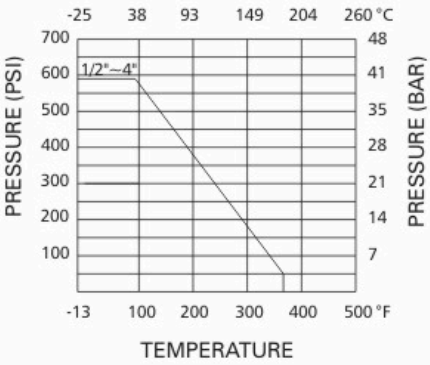

MATERIAL LIST

ITEM	PART	MATERIAL	QTY.
1	Body	CF8M	1
2	Ball Seat	R-PTFE(15%)	2
3	Ball	SS316	1
4	Body Gasket	PTFE	2
5	Cap	CF8M	2
6	Spring Washer	SS304	8(12)
7	Nut	SS304	8(12)
8	Bolt	SS304	4(6)
9	Stem	SS316	1
10	Thrust Washer	PTFE	1
11	Stem Packing	PTFE	1
12	Gland Nut	SS304	1
13	Handle	SS304	1
14	Spring Washer	SS304	1
15	Nut	SS304	1
16	Lock Device	SS304	1
17	Handle Cover	PLASTIC	1

DIMENSION LIST

SIZE	d	D	D1	D2	L	H	W	z-ϕd1	b	f	N·m	Kgs
DN15	15	95	65	45	130	84	148	4-ϕ14	16	2	5	1.90
DN20	20	105	75	58	150	87	148	4-ϕ14	18	2	8	2.84
DN25	25	115	85	68	160	93	170	4-ϕ14	18	2	10	3.54
DN32	32	140	100	78	180	99	170	4-ϕ18	18	2	14	5.22
DN40	40	150	110	88	200	114	212	4-ϕ18	18	3	18	6.56
DN50	50	165	125	102	230	122	212	4-ϕ18	20	3	25	8.85
DN65	65	185	145	122	290	150	254	8-ϕ18	22	3	48	15.20
DN80	80	200	160	138	310	161	254	8-ϕ18	24	3	75	19.40
DN100	100	235	190	162	350	180	285	8-ϕ22	24	3	110	26.60